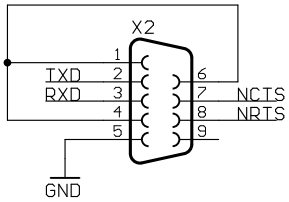


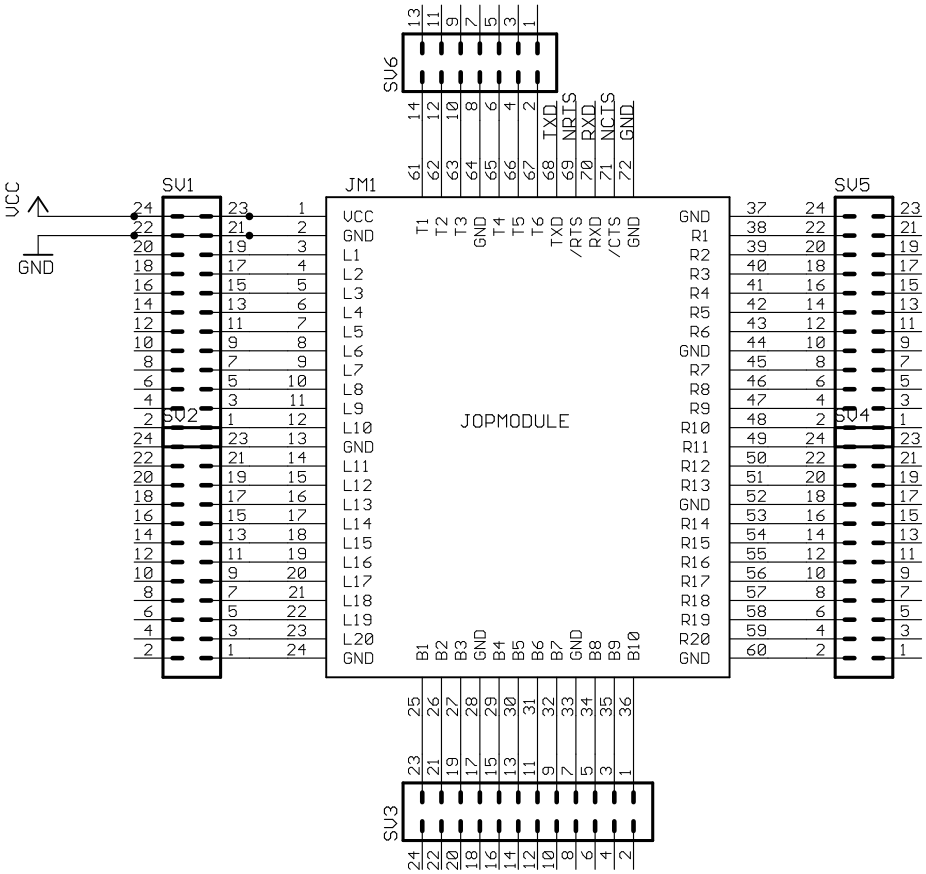


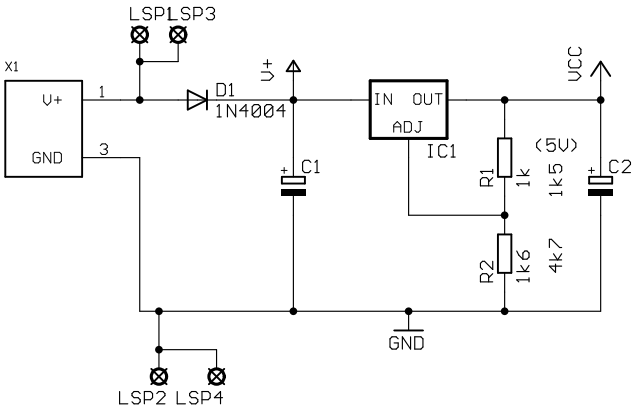


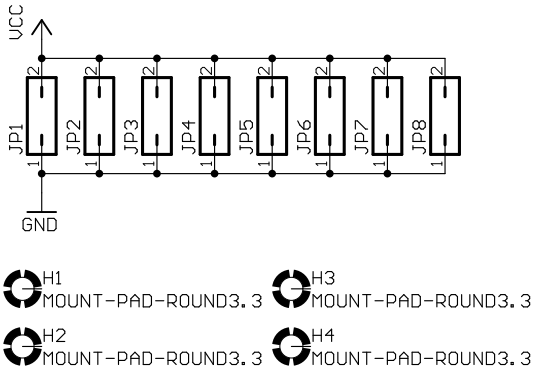


| | |
|---|---|
| Date: 12.01.2005 12:02:20 | Ver.: |
| TITLE: simpexp | Sheet: 1/1 |